INTENDED FOR USE BY PROFESSIONAL EQUIPMENT OPERATORS

OPERATING INSTRUCTIONS

908 W. Main • P.O. Box 368
Laurel, MT USA 59044
(1) 800-548-7341
(1) 406-628-8231
www.wpg.com

READ AND UNDERSTAND BEFORE OPERATING THIS EQUIPMENT

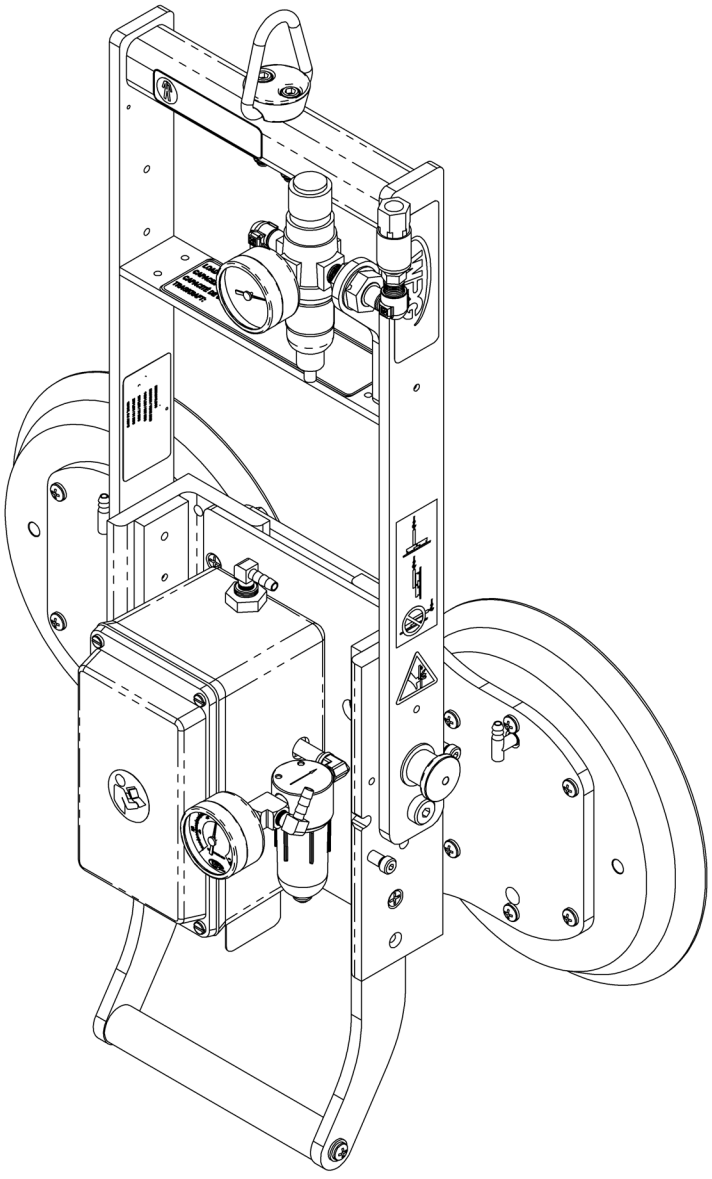

MANUAL TILTER, AIR-POWERED

Model numbers: MT1HV11AIR, MT2HV11AIR (shown)

Original Instructions © Wood's Powr-Grip Co., Inc.

TABLE OF CONTENTS

SPECIFICATIONS 3
SAFETY 4
OPERATING FEATURES 5
ASSEMBLY 6
INTENDED USE 8
LOAD CHARACTERISTICS 8
INDIRECT LOADING 9
OPERATING ENVIRONMENT 9
DISPOSAL OF THE LIFTER 9
OPERATION 10
BEFORE USING THE LIFTER 10
Taking Safety Precautions 10
Performing Inspections and Tests 10
TO ATTACH THE LIFTER TO A LOAD 11
Positioning the Lifter on the Load 11
Sealing the Pad(s) against the Load 12
Reading the Vacuum Gauge 12
TO LIFT AND MOVE THE LOAD 13
Interpreting the Vacuum Gauge 13
Monitoring the Vacuum Gauge 13
Controlling the Lifter and Load 14
In Case of a Power Failure 14
TO TILT THE LOAD 15
TO RELEASE THE LIFTER FROM THE LOAD 16
AFTER USING THE LIFTER 16
Storing the Lifter 16
Transporting the Lifter 16
INSPECTIONS AND TESTS 17
INSPECTION SCHEDULE 17
TESTING 18
Lifter/Load Compatibility Test 18
Operational Tests 19

TABLE OF CONTENTS

Vacuum Test 19
Rated Load Test 20
MAINTENANCE 21
VACUUM PAD MAINTENANCE 21
Pad-to-Load Friction Coefficient 21
Pad Inspection 21
Pad Cleaning 22
REPLACEMENT PARTS 23
REGISTRATION AND LIMITED WARRANTY 24
TO REGISTER THIS WPG PRODUCT 24
ABOUT THE LIMITED WARRANTY 24
Obtaining Warranty Service or Repair Service 24

SPECIFICATIONS

Product Description	Designed for use with hoisting equipment, MT1(2)HV11AIR lifters support loads using vacuum and manipulate loads using manual 90° tilt motions.	
Model Number	MT1HV11AIRS	MT2HV11AIRS
Vacuum Pads (standard rubber[1])	One 10" [25 cm] nominal diameter, lipped (Model HV11)	Two 10" [25 cm] nominal diameter, lipped (Model HV11)
Pad Spread (to outer edges)	11" x 11" [28 cm x 28 cm]	11" x 25½" [28 cm x 65 cm]
Maximum Load Capacity[2, 3]		
For vertical or tilted lifting	150 lbs [68 kg]	300 lbs [135 kg]
For flat lifting	300 lbs [135 kg][4]	300 lbs [135 kg]
Lifter Weight	40 lbs [19 kg]	50 lbs [23 kg]
Power Source	Compressed air, 80-150 psi [550-1035 kPa] line pressure, 2 SCFM [57 liters/minute] @ 80 psi [550 kPa]	
Tilt Capability	Manual, 90°	
Product Options	When applicable, see separate instructions.	
Operating Elevation	Up to 6,000' [1,828 m]	
Operating Temperatures	32° — 104° F [0° — 40° C]	
Service Life	16,000 lifting cycles, when used and maintained as intended[5]	
ASME Standard BTH-1	Design Category "B", Service Class "0"	
Troubleshooting Guide	TST-016_GENERIC_LEAK_TEST_rev_2014-086	

1..... Available with other rubber compounds for special purposes.

2..... The Maximum Load Capacity is rated and verified at a vacuum of 16" Hg [-54 kPa] on clean, smooth, nonporous flat surfaces with a friction coefficient of 1. Rating is verified by testing on polycarbonate (or metal with a painted surface) with a coefficient of friction similar to plain (non-coated) glass and a surface temperature at approx. 70° F [21° C].

3..... Pad compound, load rigidity, strength, surface conditions, overhang, angle, center of gravity and temperature affect lifting capacity. A "qualified person" should evaluate the effective lifting capacity for each use (see definition under "Rated Load Test").

4. .... Caution: Loads ranging from 151 lbs [70 kg] to 300 lbs [135 kg] can be lifted only when the tilt latch is engaged in the flat lifting orientation. Do not disengage the latch at any time when flat lifting.

5..... Vacuum pads, filter elements and other wear-out items are excluded.

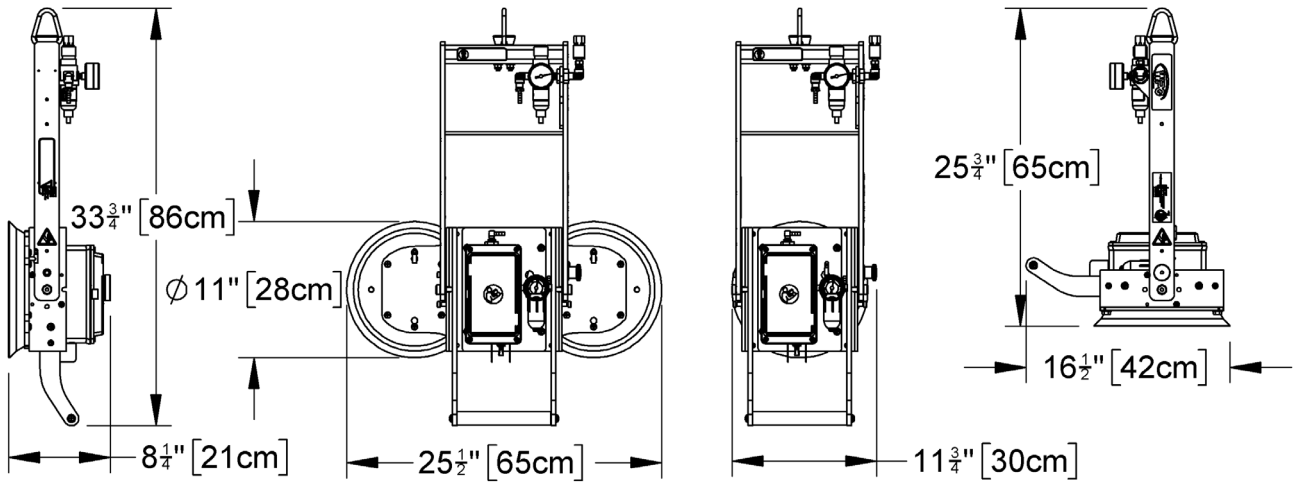

SAFETY

- Wear personal protective equipment that is appropriate for the load material. Follow trade association guidelines.
- Do not remove or obscure safety labels.
- Do not make any modifications to the lifter. Modifying the lifter will void the “LIMITED WARRANTY”.
- Use the lifter only in an approved “OPERATING ENVIRONMENT” (see “INTENDED USE”).
- Make sure to consider all possible effects of “INDIRECT LOADING” on lifting capacity (see “INTENDED USE”).
- Do not use a lifter that is damaged, malfunctioning, or missing parts.
- Do not use a lifter if the sealing edge of any vacuum pad is cut or otherwise damaged.
- Do not use a lifter to lift cracked or broken glass.
- Do not exceed the Maximum Load Capacity or lift loads the lifter is not designed for (see “INTENDED USE”).
- Do not use a lifter if the Maximum Load Capacity or any safety label appears to be missing or obscured.
- Make sure the contact surfaces of loads and vacuum pads are clean before attaching lifters (see “MAINTENANCE”).
- Position vacuum pads correctly on the loads before lifting (see “OPERATION”).
- Do not lift a load if any vacuum indicator shows inadequate vacuum.
- Keep unauthorized personnel away from the lifter, to avoid injury in case of an unintended load release.
- Do not touch the vacuum release controls during a lift.
- Do not allow people to ride on the lifter or the load.
- Do not lift a load higher than necessary or leave suspended loads unattended.
- Do not position a loaded or unloaded lifter over people.
- Before servicing a powered lifter, place the power control in the inactive position and, when possible, disconnect the power source.

OPERATING FEATURES

Features shown here are underlined on their first appearance in each section following.

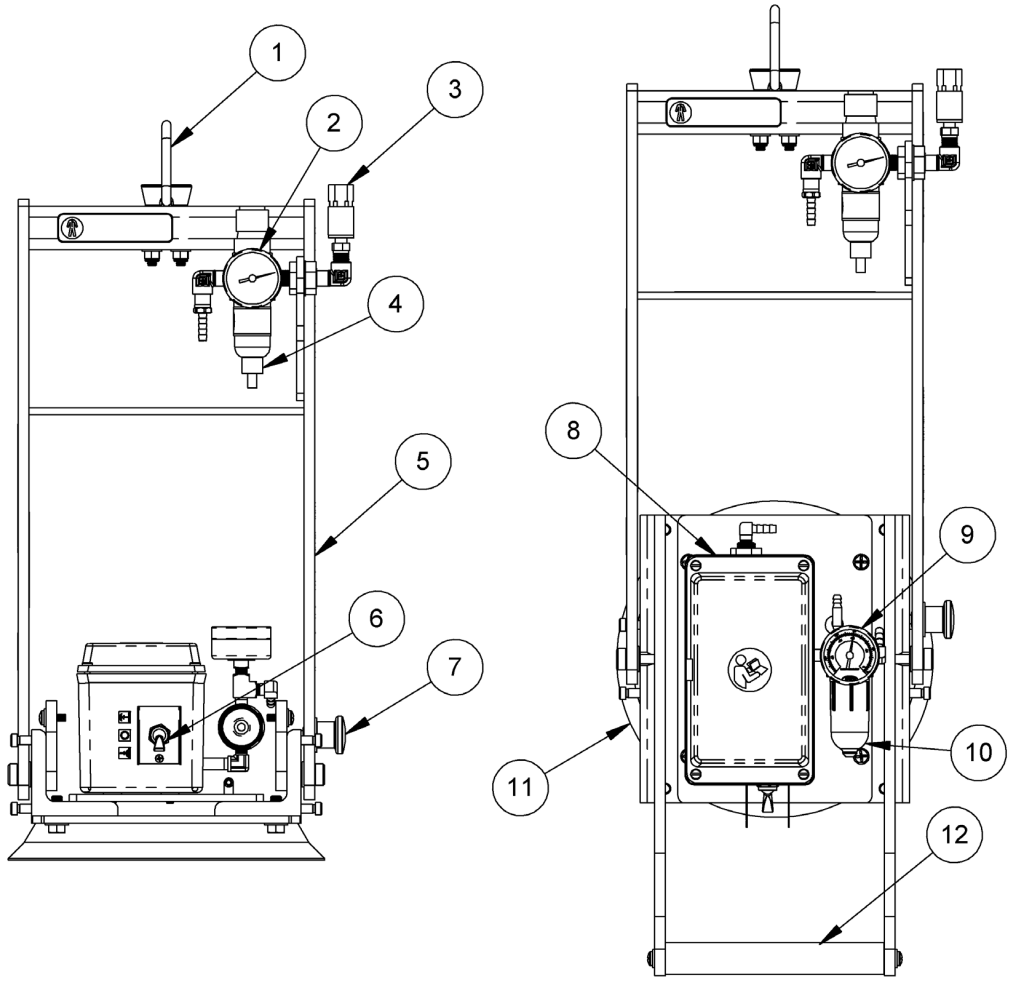

1	LIFT POINT	2	AIR PRESSURE GAUGE
3	INCOMING AIR QUICK CONNECTOR	4	AIR FILTER and PRESSURE REGULATOR
5	LIFT BAR	6	ATTACH/RELEASE SWITCH
7	TILT LOCKS	8	Enclosure with VACUUM PUMP (venturi)
9	VACUUM GAUGE	10	AIR FILTER
11	VACUUM PAD	12	CONTROL HANDLE

Note: A standard MT1HV11AIR is shown.[1] Although some of the following photos do not show this specific lifter, they all illustrate how this kind of lifter functions.

For information about specific parts, see "REPLACEMENT PARTS" and/or any separate instructions for Product Options.

1..... Features for a standard MT2HV11AIR are similar.

ASSEMBLY

1) Remove all shipping materials and save them with the shipping container for future use.

2) Suspend the lifter from appropriate hoisting equipment:

2.1) Select a crane and/or hoist rated for the Maximum Load Capacity plus the Lifter Weight.



Note: Any lifter use must comply with all statutory or regulatory standards for hoisting equipment in your region.

2.2) Pull the tilt release knob outward, to disengage the tilt latch, and raise the lift bar until it latches in the vertical position.

2.3) Attach the hoisting hook to the lift point (fig. 2A).

Make sure hook has restraining latch (see arrow in fig. 2A).

Note: Use rigging as needed to make sure the hook does not interfere with the load (fig. 2B).

Only use rigging rated for Maximum Load Capacity plus Lifter Weight.

2A



2B



2.4) Use the hoisting equipment to remove the lifter from the shipping container. Avoid damaging the vacuum pad(s).

3) Remove the pad cover(s) and save for future use (fig. 3A).

3A



4) Connect the lifter to an appropriate compressed air supply (see Power Source under "SPECIFICATIONS"):

> ***Qualified service personnel should install the female quick connector (supplied) on the compressed air line.***

Caution: *Make sure the air line is routed so that it does not become tangled or damaged during operation.*

Connect the female quick connector to the male quick connector (figs. 4A-C).







5) Adjust the air pressure regulator to supply 80 psi [550 kPa]:[1]

5.1) Pull up the adjustment collar on top of the regulator. Turn the collar clockwise to increase pressure or counter-clockwise to reduce pressure (fig. 5A).

5.2) When the air pressure gauge registers a minimum air pressure of 80 psi [550 kPa], push down the collar to lock it in place.

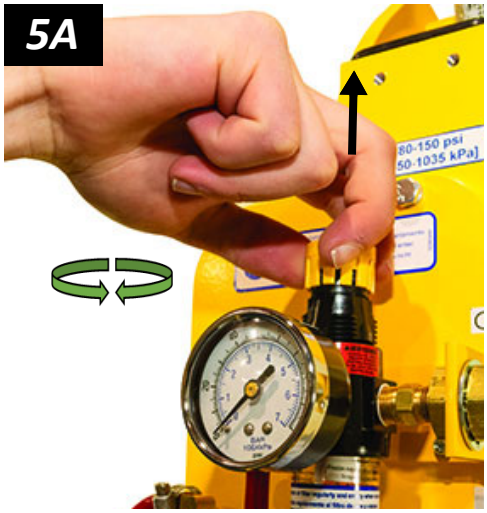

6) Perform tests as required under "TESTING".

1..... Exceeding this pressure consumes more air and does not improve lifter performance.

LOAD CHARACTERISTICS

Make sure the vacuum lifter is intended to handle each load according to these requirements:

Do NOT lift explosives, radioactive substances or other hazardous materials.

- The load weight must not exceed the Maximum Load Capacity.



- The load must be a single piece of relatively nonporous material with a flat and relatively smooth contact surface.[1, 2] To determine whether the load is too porous or rough, perform the "Lifter/Load Compatibility Test".
- The load's contact surface must be able to obtain a friction coefficient of 1 with the lifter's vacuum pad(s) (see "Pad-to-Load Friction Coefficient"). Otherwise, the capacity should be derated appropriately.
- The load's surface temperature must not exceed the Operating Temperatures.[3]



- The load's *minimum* length and width are determined by the current Pad Spread (see "SPECIFICATIONS").
- The load's *maximum* length and width are determined by its allowable overhang.[4]
- 1" [2.5 cm] is the allowable thickness at Maximum Load Capacity.[5]



Note: Standard vacuum pads can stain or deform load surfaces with light colors or soft coatings. Test such surfaces for damaging effects before using the lifter on them.[6]

1..... Although concave vacuum pads can also attach to some curved loads, curvature can reduce lifting capacity. Contact WPG for more information.

2..... A "single piece" of material includes curtainwall assemblies, unitized glazing systems and similar construction units.

3..... Vacuum pads made from a heat-resistant rubber compound can enable you to lift loads with higher surface temperatures. Contact WPG or an authorized dealer for more information.

4..... The allowable overhang is the amount of load material that can extend sideways beyond vacuum pads without breaking or otherwise being damaged. This depends on the load material, its thickness, and the angle of handling (if any). Since every material has different physical properties, the allowable overhang must be evaluated separately for each load type. Contact WPG or an authorized dealer for more information.

5..... However, the allowable thickness increases as load weight decreases. Contact WPG for more information.

6..... Alternative rubber compounds are available for these purposes. Contact WPG or an authorized dealer for more information.

INDIRECT LOADING

Make sure to account for dynamic loading or other inadvertent loading that can negatively affect lifting capacity, such as:

Indirect loading can reduce lifting capacity.

- Weight amplification that results when a loaded vacuum lifter abruptly starts/stops moving, changes direction or bounces up and down (eg, when a telehandler transports a loaded lifter across rough terrain).
- External force that effectively increases the weight of a lifter's attached load (eg, when a load of sheet material reacts to wind gusts).

OPERATING ENVIRONMENT

Make sure the lifter is suitable for each work environment, given the following restrictions:

Never use lifter in dangerous environments.

- This lifter is not intended for any environment that is dangerous to the operator or damaging to the lifter. Avoid environments containing explosives, caustic chemicals and other dangerous substances.
- The work environment is limited by the Operating Elevation and Operating Temperatures.[1, 2]

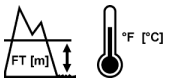

- The lifter is not designed to be watertight. Do not use it in rain or other unsuitable conditions.

Moisture can reduce lifting capacity.

CE/UKCA *— A secondary positive holding device is required to lift loads on constructions sites or in other "high risk zones" (see EN 13155).*

DISPOSAL OF THE LIFTER

After the Service Life of the lifter has ended (see "SPECIFICATIONS"), dispose of it in compliance with all local codes and applicable regulatory standards.

1..... Although lifter use may be possible at higher elevation, lifting capacity is reduced whenever the lifter is unable to attain vacuum in the green range on the vacuum gauge. Contact WPG for more information.

2..... Special provisions may allow the lifter to operate outside the specified temperature range. Contact WPG for more information.

BEFORE USING THE LIFTER

Determine whether the vacuum lifter is capable of each intended task (see "SPECIFICATIONS" and "INTENDED USE"). Then complete the following preparations:

Taking Safety Precautions

- Be trained in all industry and regulatory standards for lifter operation in your region.
- Follow trade association guidelines about precautions needed for each load material.



Read all directions and safety rules before using lifter.



Always wear appropriate personal protective equipment.

Performing Inspections and Tests

- Follow the "INSPECTION SCHEDULE" and "TESTING".
- Service the 2 air filters whenever a bowl contains liquid or other contaminants, or an element appears dirty (see "AIR FILTER MAINTENANCE" in *SERVICE MANUAL*).



Examine air filters regularly and service when needed.

To Attach the Lifter to a Load

Make sure the contact surfaces of the load and vacuum pad(s) are clean (fig. 1A — see "Pad Cleaning").

1A



Positioning the Lifter on the Load

1) Center the pad frame on the load (fig. 1B), to avoid unexpected load movement or release.

   > ***Always center pad(s) on load.***

   Off-center loading could result in personal injury, as well as damage to the lifter or load.[1]

2) Make sure the vacuum pad(s) will fit on the load.

3) Place the vacuum pad(s) in contact with the load surface.

1B

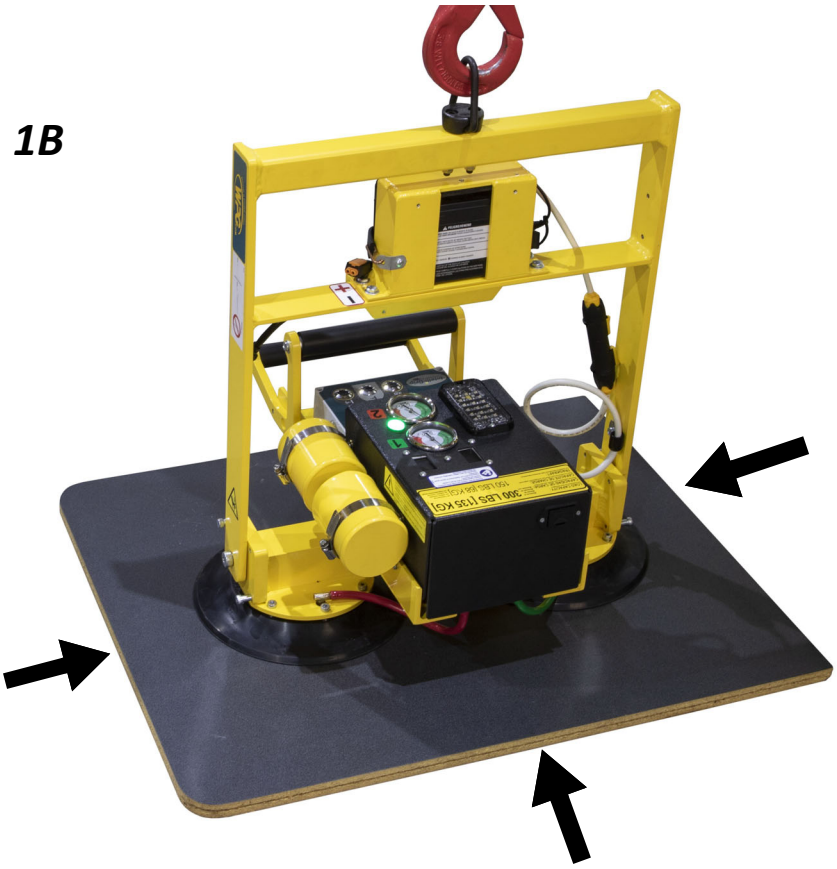

1..... The lifter is designed to handle the maximum load weight when the load's center of gravity is positioned within 3" [7.5 cm] of the pad frame's center point.

Sealing the Pad(s) against the Load

1) Place the attach/release switch in the "attach" position (|→ — fig. 1A).[1]

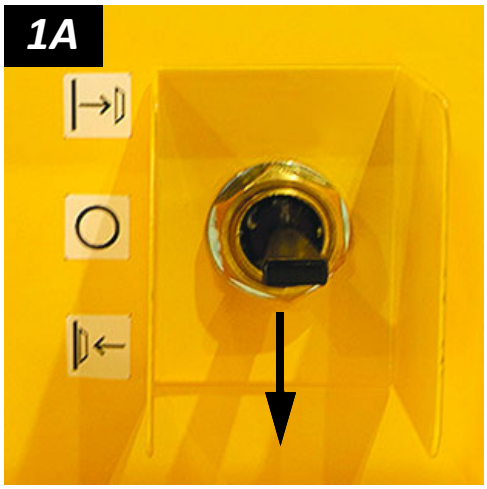

> ***Keep switch in "attach" position throughout lift.***

Any interruption of airflow during lifter operation could result in an unintentional load release and personal injury.

2) Make sure each vacuum pad seals completely against the load.[2]

Reading the Vacuum Gauge

The vacuum gauge shows the current vacuum level in positive inches of Hg and negative kPa:

- Green range (≥16" Hg [≤ -54 kPa]): Vacuum level is sufficient to lift the maximum load weight (fig. 1B).
- Red range (< 16" Hg [> -54 kPa]): Vacuum level is ***not*** sufficient to lift the maximum load weight (fig. 1C).





If it takes more than 5 seconds for the vacuum level to reach 5" Hg [-17 kPa], press on each vacuum pad until it has sealed.

Once each pad has sealed, the lifter should be able to maintain sufficient vacuum for lifting, except when used above the maximum Operating Elevation.[3] If it does not, perform the "Vacuum Test".

1..... Do not place the attach/release switch in the "attach" position until each vacuum pad is contacting the load.

2..... Although a vacuum pad may become distorted during shipping or storage, this condition should correct itself with continued use.

3..... If the lifter is used above the maximum Operating Elevation (see "SPECIFICATIONS"), it may not be able to maintain sufficient vacuum for lifting. Contact WPG for more information.

To Lift and Move the Load

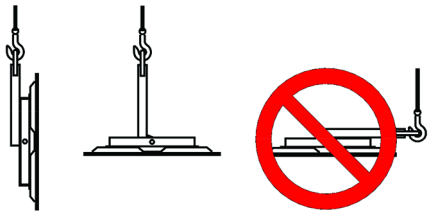

Lift bar must be vertical to lift load.

Interpreting the Vacuum Gauge

Vacuum is sufficient to lift the Maximum Load Capacity whenever the vacuum gauge registers in the green range.

Never lift load unless vacuum gauge registers in the green range, because premature lifting could result in load release and personal injury.

When air leaks into the vacuum system, the vacuum pump turns on and off as necessary to maintain sufficient vacuum for lifting.

Monitoring the Vacuum Gauge

Monitor the vacuum gauge (fig. 1A) throughout the entire lift.



Make sure the vacuum gauge remains completely visible.

If the ***vacuum gauge shows a level less than 16" Hg [greater than -54 kPa]:***

1) Keep everyone away from a suspended load until it can be safely lowered to a stable support.

Stay clear of any suspended load while gauge warns of insufficient vacuum.

2) Stop using the lifter until the cause of the vacuum loss can be identified: Conduct the "Pad Inspection" and perform the "Vacuum Test".

3) Correct any faults before resuming normal operation of the lifter.

Controlling the Lifter and Load

When the lifter is ready, use the hoisting equipment to raise the lifter and load as needed.

Use the control handle (fig. 1A) to keep the lifter and load in the required position.

Once there is enough clearance, you may move the load as required.



In Case of a Power Failure

Although the lifter is designed to support the load for at least 5 minutes without power, this depends on many factors, including the "LOAD CHARACTERISTICS" and the condition of the vacuum pad(s) (see "VACUUM PAD MAINTENANCE").

If a power failure occurs, keep everyone away from a suspended load until it can be safely lowered to a stable support. Correct any faults before resuming normal operation of the lifter.

Stay clear of any suspended load during power failure.

TO TILT THE LOAD

Tilted lifting and vertical lifting reduce Maximum Load Capacity.

Make sure load is positioned correctly on lifter (as previously directed).

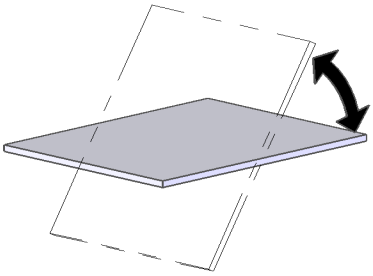

1) Make sure the load has enough clearance to tilt without contacting anyone or anything.
2) Use the control handle to keep the load under control at all times.
3) Disengage the tilt latch by pulling the tilt release knob outward. Lift upward or press downward on the control handle to tilt the load as required (fig. 3A).

Note: See "LOAD CHARACTERISTICS" about allowable load overhang.

3A



To Release the Lifter from the Load

> ***Make sure load is at rest and fully supported before releasing vacuum pad(s).***

1) Place and hold the attach/release switch in the "release" position (|→▯ — fig. 1A), to break the vacuum seal.

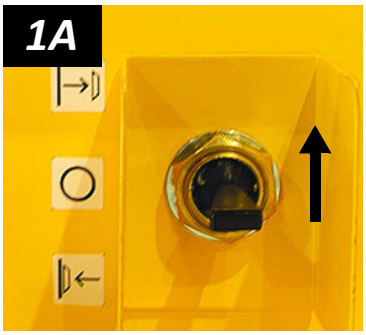

> ***Do not move lifter until lifter releases completely, because such movement could result in load damage or personal injury.***

2) Make sure the load is successfully released.
3) Let go of the switch, which will automatically return to the "off" position (◯), to conserve compressed air.
4) Before you lift another load, perform the Every-Lift Inspection (see "Inspection Schedule").

After Using the Lifter

Use the hoisting equipment to lower the vacuum lifter gently onto a stable support. Then detach the hoisting hook from the lift point.

Caution: *Do not set the lifter on surfaces that could soil or damage vacuum pad(s).*

Storing the Lifter

1) Disconnect the compressed air supply (see "ASSEMBLY").
2) Use the cover(s) supplied to keep the vacuum pad(s) clean (fig. 2A).



CE/UKCA — *To prevent the lifter from tipping over on relatively horizontal surfaces, place the vacuum pad(s) facedown on a clean, smooth, flat surface. Then lower the lift bar and place a support under the lift point.*

3) Store the vacuum lifter in a clean, dry location.

Transporting the Lifter

Secure the lifter in the original shipping container with the original shipping materials or equivalent.

INSPECTION SCHEDULE

Perform inspections according to the following frequency schedule. If any fault is found, correct it and perform the next most frequent inspection before using the vacuum lifter.

Note: If a lifter is used less than 1 day in a 2-week period, perform the Periodic Inspection before using it.

Action	Every Lift	Frequent[1] (every 20-40 hrs)	Periodic[2] (every 250-400 hrs)
Examine vacuum pad(s) for contaminants or damage (see "Pad Inspection").	✓	✓	✓
Examine load surface for contaminants or debris.	✓	✓	✓
Examine controls and indicators for damage.	✓	✓	✓
Examine lifter's structure for damage.		✓	✓
Examine vacuum system for damage (including vacuum pad(s), fittings and hoses).		✓	✓
Examine air filters for conditions requiring service (see "AIR FILTER MAINTENANCE" in *SERVICE MANUAL*).		✓	✓
Perform "Vacuum Test".		✓	✓
Check for unusual vibrations or noises while operating lifter.		✓	✓
Examine entire lifter for evidence of: • looseness, excessive wear or excessive corrosion • deformation, cracks, dents to structural or functional components • cuts in vacuum pad(s) or hoses • any other hazardous conditions			✓

1..... The Frequent Inspection is also required whenever the lifter has been out of service for 1 month or more.

2..... The Periodic Inspection is also required whenever the lifter has been out of service for 1 year or more. Keep a written record of all Periodic Inspections. If necessary, return the lifter to WPG or an authorized dealer for repair (see "REGISTRATION AND LIMITED WARRANTY").

TESTING

Perform the following test to determine whether or not a load surface is too porous or rough:

Lifter/Load Compatibility Test[1]

1) Make sure the vacuum generating system is functioning correctly (see "Vacuum Test").
2) Thoroughly clean the load surface and the vacuum pad(s) (see "Pad Cleaning").
3) Place the load in the upright position on a stable support.
4) Attach the vacuum pad(s) to the load as previously directed.
5) After the vacuum level appears in the green range on the vacuum gauge, disconnect the compressed air supply (see "ASSEMBLY").
6) Raise the load a minimal distance, to make sure it is supported by the lifter.

> ***Take precautions in case load should fall during test.***

7) Watch the vacuum gauge: ***Starting from a vacuum level of 16" Hg [-54 kPa], the lifter must maintain a vacuum level greater than 12" Hg [less than -41 kPa] for 5 minutes.***[2] If not, lifting this load requires additional precautions (eg, a load sling). Contact WPG for more information.
8) Lower the load *after* 5 minutes or *before* the vacuum level diminishes to 12" Hg [increases to -41 kPa].

1..... The "Pad-to-Load Friction Coefficient" can affect the outcome of this test.

2..... Under CE and UKCA requirements, the lifter must maintain a vacuum level ***greater than 8" [less than -27 kPa]***.

INSPECTIONS AND TESTS

Perform the following tests before placing the lifter in service *initially, following any repair,* when directed in the *"INSPECTION SCHEDULE"*, or *whenever necessary*:

Operational Tests

Test all features and functions of the lifter (see "OPERATING FEATURES" and "OPERATION").

Vacuum Test

1) Clean the face of the vacuum pad(s) (see "Pad Cleaning").
2) Use a test load with weight equal to the Maximum Load Capacity, a clean, smooth, nonporous surface and other appropriate "LOAD CHARACTERISTICS". [1]



3) Attach the lifter to the test load as previously directed.
4) After the vacuum level appears in the green range on the vacuum gauge, raise the load a minimal distance and disconnect the compressed air supply (see "ASSEMBLY").

Take precautions in case load should fall during test.

5) Watch the vacuum gauge: *The vacuum level should not decrease by more than 4" Hg [increase by more than 14 kPa] in 5 minutes.*
6) Lower the load after 5 minutes or whenever a lifter fails the test, and release the load as previously directed.

Never use lifter that has failed test.

7) Qualified service personnel must correct any fault in the vacuum system before returning the lifter to service.

This service must be performed by qualified service personnel.

1..... The load should have either a flat surface or no more curvature than the lifter is designed for, if any.

Rated Load Test[1]

The following steps must be performed or supervised by a qualified person:[2]

1) Use a test load that weighs 125% (±5%) of the Maximum Load Capacity and has the appropriate "LOAD CHARACTERISTICS".



2) Attach the vacuum pad(s) to the load as previously directed.
3) Position the load to produce the greatest stress on the lifter consistent with "INTENDED USE".
4) Raise the load a minimal distance and leave it suspended for 2 minutes.
5) Once the test is completed, lower the load for release as previously directed.



Take precautions in case load should fall during test.

6) Inspect the lifter for any stress damage, and repair or replace components as necessary to successfully pass the test.



Never use lifter that has failed test.

7) Prepare a written report of the test and keep it on file.

1..... An equivalent simulation may also be used. Contact WPG for more information.

2..... A "qualified person" has successfully demonstrated the ability to solve problems relating to the subject matter and work, either by possessing a recognized degree in an applicable field or a certificate of professional standing, or by possessing extensive knowledge, training and experience.

*Note: Refer to **SERVICE MANUAL #36112** when applicable.*

VACUUM PAD MAINTENANCE

Pad-to-Load Friction Coefficient

The friction coefficient represents the lifter's ability to resist load slippage. The Maximum Load Capacity is based on a friction coefficient of 1, as determined by testing of clean, new, standard rubber vacuum pads on clean, dry, regular glass. ***If the lifter is used under any other conditions, a qualified person must first determine the effective lifting capacity.***[1]

Long-term exposure to heat, chemicals or UV light can damage vacuum pads. Replace pad(s) every 2 years or more often when necessary.

Pad Inspection

Inspect the vacuum pad(s) according to the "INSPECTION SCHEDULE" and correct the following faults before using the lifter (see "REPLACEMENT PARTS", when applicable):

- Contaminants on the face (item 1 in fig. 1A) or sealing edges (item 2 in fig. 1A).
- Filter screen (item 3 in fig. 1A) missing from face.

> ***Replace any pad that has damaged sealing edges.***

- Nicks, cuts, deformation or abrasions in sealing edges.
- Wear, stiffness or glaze.

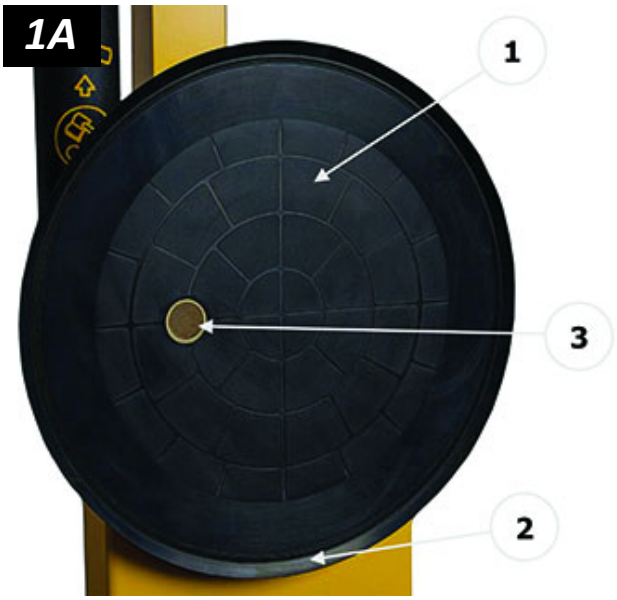

1..... A "qualified person" has successfully demonstrated the ability to solve problems relating to the subject matter and work, either by possessing a recognized degree in an applicable field or a certificate of professional standing, or by possessing extensive knowledge, training and experience.

Pad Cleaning

1) Regularly clean the face of the vacuum pad(s) (fig. 1A), using soapy water or other mild cleansers to remove oil, dust and other contaminants.

1A



> ***Never use harsh chemicals on vacuum pad.***

Solvents, petroleum-based products (including kerosene, gasoline and diesel fuel) or other harsh chemicals can damage vacuum pads.

> ***Never use rubber conditioners on vacuum pad.***

Many rubber conditioners can leave a hazardous film on vacuum pads.

2) Prevent liquid from entering the vacuum system through the suction hole on each pad face.
3) Wipe each pad face clean, using a clean sponge or lint-free cloth to apply the cleanser.[1]
4) Allow the pad(s) to dry completely before using the lifter.

1..... A brush with bristles *that do not harm rubber* can help remove contaminants clinging to sealing edges. If these cleaning methods are not successful, contact WPG or an authorized dealer for assistance.

REPLACEMENT PARTS

Stock No.	Description	Qty.
65440	Vacuum Hose – 0.245" ID x 3/8" OD – Red	*
65438	Vacuum Hose – 1/8" ID x 1/4" OD – White	*
65430	Vacuum Hose – 7/32" ID x 7/16" OD – Black	*
53132	Hose Fitting – Tee – 5/32" ID	1
53122	Pad Fitting – Elbow – 3/64" ID	1 / 2
49605T	Vacuum Pad – Model HV11 / 10" [25 cm] Diameter – Lipped	1 / 2
36112	Service Manual – Compressed Air	1
29353	Pad Cover	1 / 2
15630	Pad Filter Screen - Large	1 / 2
10704	Bolt – Hex Head – 5/8" x 1/4-20 Thread (for mounting pads)	6 / 12

* — Length as required; sold by the inch (approx 2.5 cm).

*See **SERVICE MANUAL #36112** for additional parts.*

SERVICE ONLY WITH IDENTICAL REPLACEMENT PARTS,
AVAILABLE AT WPG.COM OR THROUGH AN AUTHORIZED WPG DEALER

REGISTRATION AND LIMITED WARRANTY

To Register this WPG Product

Go to the *PRODUCT REGISTRATION* page at wpg.com and complete the form. Registration keeps you advised of important updates and notifications, and simplifies inquiries to WPG regarding your product. Registration is ***not*** required to activate your Limited Warranty (see next section).

About the Limited Warranty

Note: Read the WARRANTY RETURN FORM at wpg.com for important details about the Limited Warranty.

Wood's Powr-Grip® (WPG) products are warranted to be free from defects in manufacturing and materials for 1 year from the date of purchase.



If a problem develops during the warranty period, follow the instructions below to obtain warranty service. If inspection shows that the product has a defect, WPG will repair or replace the product without charge.

Obtaining Warranty Service or Repair Service

For customers *in the U.S. and Canada*: Go to the *EXCHANGES, REPAIRS, & WARRANTIES* page at wpg.com and click the applicable link. Alternatively, you may contact the WPG Technical Service Department (see contact information below).

For customers *in all other localities*: Contact the WPG Technical Service Department (see contact information below) or your dealer for assistance.

ADDRESS	EMAIL	PHONE
Wood's Powr-Grip Co., Inc. 908 West Main St. Laurel, MT USA 59044	contactus@wpg.com	(1) 800-548-7341 (1) 406-628-8231

INTENDED FOR USE BY QUALIFIED SERVICE PERSONNEL

ENGINEERING DRAWINGS

READ AND UNDERSTAND BEFORE ROUTING, WIRING AND/OR ASSEMBLING

908 W. Main • P.O. Box 368
Laurel, MT USA 59044
(1) 800-548-7341 • (1) 406-628-8231
www.wpg.com

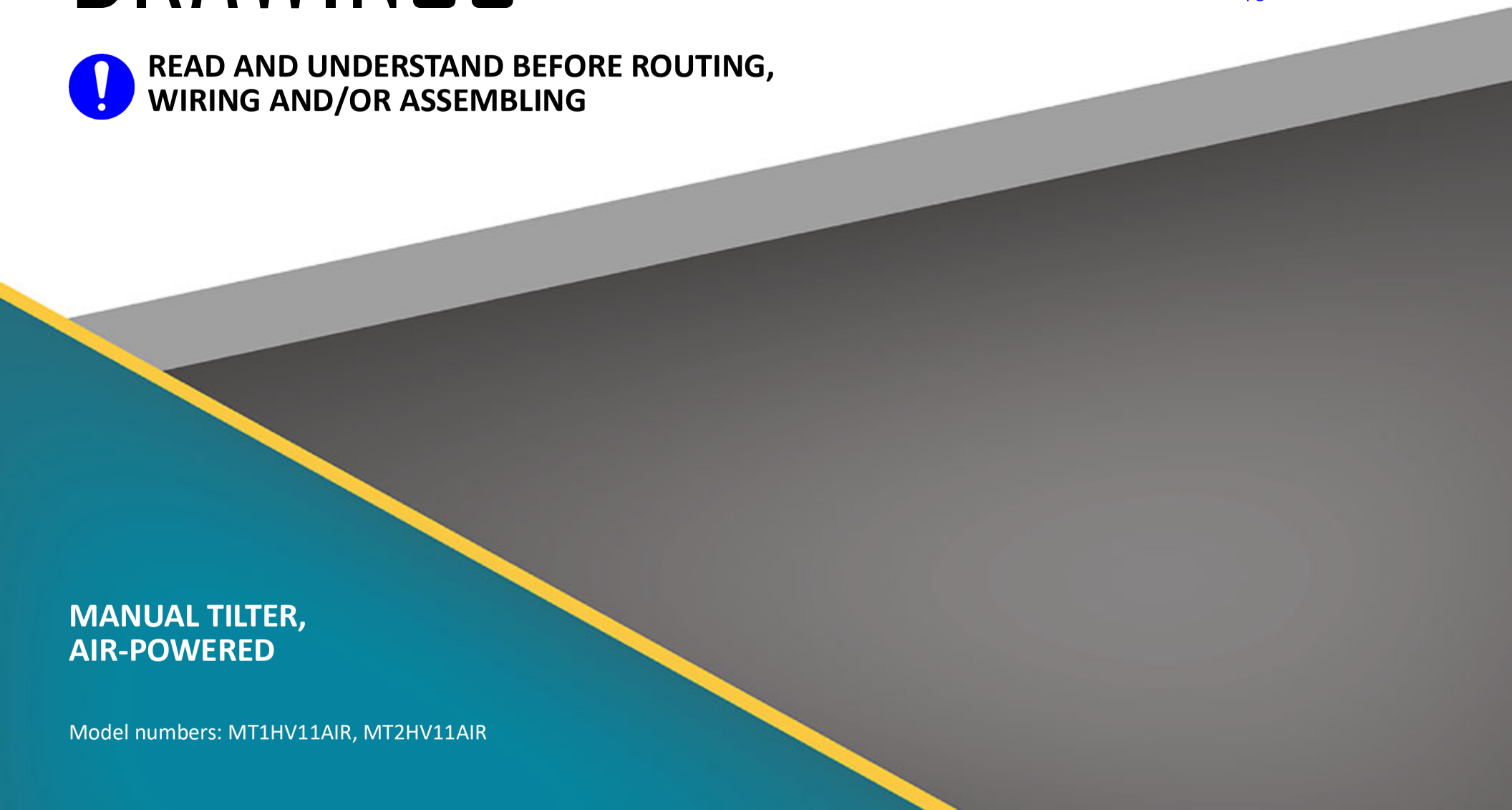

MANUAL TILTER, AIR-POWERED

Model numbers: MT1HV11AIR, MT2HV11AIR

WORKING LINE
PILOT CONTROL LINE
OUTLINE OF ENCLOSURE
PLUG

TOLERANCES: CONTROLLED BY STANDARD DN05C001 EXCEPT AS NOTED AND LISTED BELOW.

DECIMAL	ANGULAR	FRACTIONAL
X.XX ±N/A	X° ±N/A	X/XX ±N/A
X.XXX ±N/A		Ø1"≤ØX/XX ±N/A
ØX.XXX ±N/A		Ø1"> ØX/XX ±N/A

UNITS: INCHES [MILLIMETERS], DO NOT SCALE.

DRAWN: L. RENNER	DATE: 01/10/2005
CHECKED: CR	02-08-12
APPROVED:	2-13-12

TYPE: STANDARD
DIRECTORY: H:\Working\STD\7\711-AIRP\ECN 2787\
FILE [SHEET]: 711-W01 [W01]

THIS DRAWING IS THE PROPERTY OF **WOOD'S POWR-GRIP CO., INC.** LAUREL, MONTANA U.S.A.
IT IS LOANED WITH THE UNDERSTANDING THAT NEITHER IT NOR ANY INFORMATION CONTAINED THEREIN WILL BE COPIED, PUBLISHED OR TRANSMITTED TO OTHERS WITHOUT EXPRESS WRITTEN PERMISSION.

1SCFM AIR VACUUM PACKAGE
N/A
PNEUMATIC SCHEMATIC
D711-W01 [W01]

SIZE:	SCALE:	REV.:	ECN NUMBER:	DATE:	BY:
A	NONE	1	2787	12/16/2011	LER

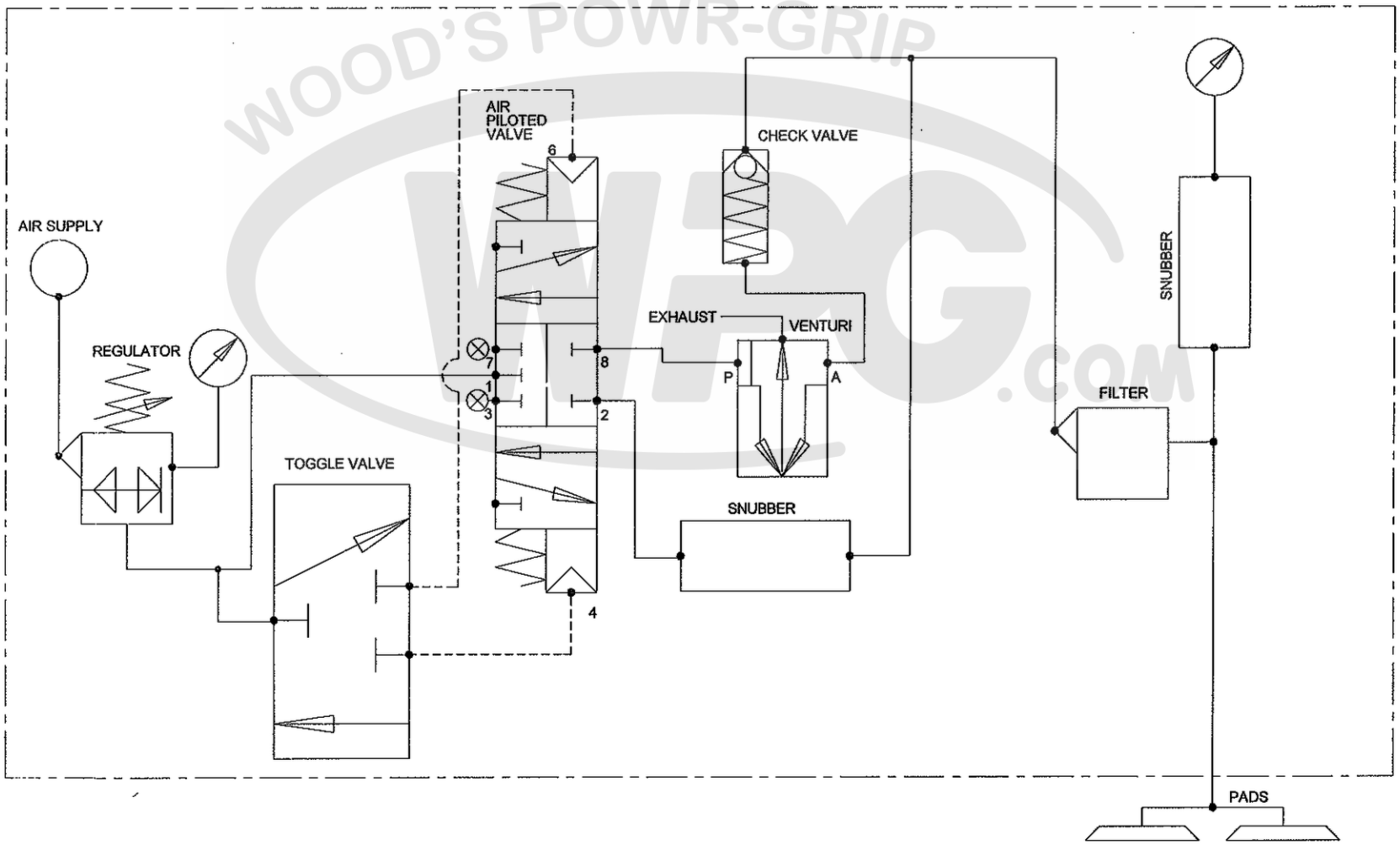

WOOD'S POWR-GRIP WPG.COM